HFB023

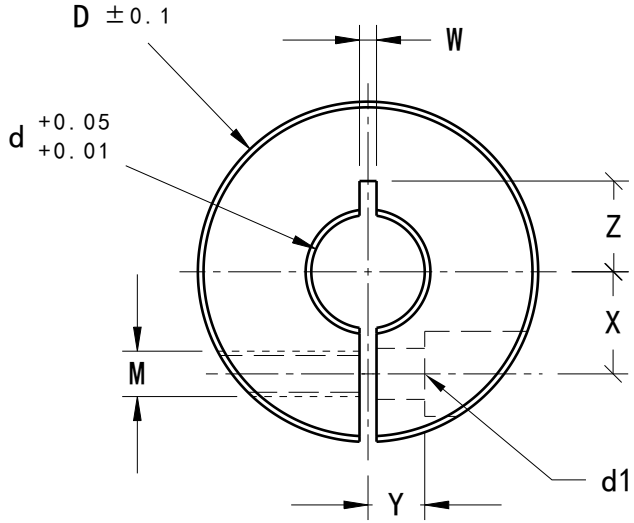

Left view
Scale: 3:2

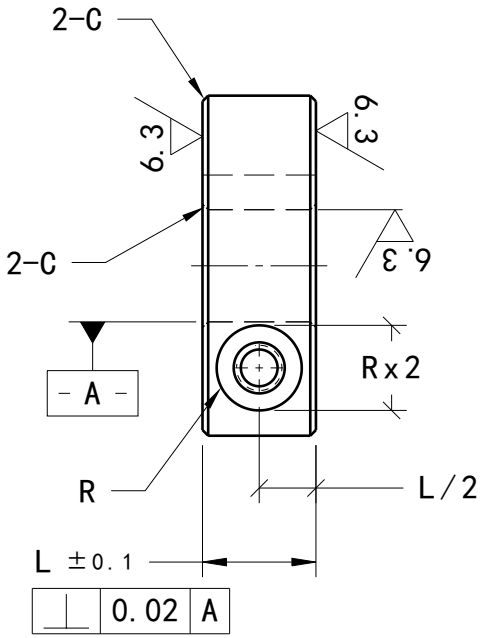

Front view
Scale: 3:2